4.2.4 RESISTANCE TO END-SPLITTING

Radial "bursting" stresses originating from prestressed tendons can produce end-splitting cracks along tendons in prestressed concrete ties with inadequate concrete confinement. These radial bursting stresses are caused by several factors including the Hoyer effect (change in diameter of the prestressing tendons due to Poisson's Ratio), the jacking force in the tendons, the rate of bond development in the tie (transfer length), and the overall geometric features and indent characteristics of the prestressing tendons.

End-splitting cracks can form at the time of de-tensioning, but they can also develop during the first few weeks after de-tensioning due to the sustained radial stresses exerted by the prestressing tendons. The ability of the concrete to resist these bursting stresses is primarily a function of the concrete cover thickness (distance from tendon axis to the nearest parallel concrete surface) and the tendon indent characteristics. Other factors that influence bursting cracking include the aggregate type, the concrete strength at de-tensioning, and the prestressing force per tendon.

Larger, angular coarse aggregates tend to provide more splitting resistance than smaller, rounded aggregates. For concrete compressive strengths above 3,500 psi, increased concrete strength at the time of de-tensioning can provide additional splitting resistance. However, for a given concrete mixture, higher compressive strengths at transfer of prestress also corresponds to a higher Modulus of Elasticity (MOE). The higher MOE increases radial stresses and limits much of the beneficial aspects of higher tensile strength.

Systematic inspection of ties removed from track revealed that significant splitting issues always included cracking along exterior (outermost) prestressing tendons. Center-to-center tendon spacing may also affect the radial bursting capacity of the tie. However, several historical tie designs employed adjacent prestressing tendons but experience has shown that these ties did not have increased maintenance issues due to splitting cracks when enough concrete cover was provided on all exterior wires. For this reason, the following test focusses solely on the issue of prestressing tendon cover and not the center-to-center tendon spacing.

4.2.4.1 Splitting Resistance Test (SRT)

a. Test Purpose:

Evaluate a tie design's resistance to end-splitting cracks.

b. Test Frequency:

One-time test, repeated whenever there is a

- reduction in prestressing tendon design edge distance
- reduction in design release strength
- change in prestressing tendon source
- change in specified indent characteristics
- change in aggregate source
- change of more than 10% in coarse or fine aggregate proportion

c. Test Procedure:

SRT

The SRT requires casting six parts conforming to the tie design parameters, but with a 25% reduction in edge distance, and monitoring them for cracking at de-tensioning and over a 14-day period. After 14 days, the sum total length of all cracks present in the parts shall be measured and recorded.

A tie producer can simultaneously meet SRT requirements for multiple tie designs that utilize the same concrete mixture and prestressing tendon type by testing the most-severe case. The most severe case would combine the minimum tendon edge distance, highest force per tendon, smallest cross-sectional area, and lowest design release strength of all tie types represented by the SRT.

Parts cast for this test may be whole ties cast in modified cavities to reduce the cover thickness by 25%, or scaled prisms. Prism design and fabrication is described Section 4.2.4.2.

d. Interpretation of Results:

If significant longitudinal splitting cracks appear along the prestressing tendons after de-tensioning, or anytime within 14 days after de-tensioning, the tie design may be susceptible to concrete end-splitting cracks

Prisms: After 14 days, if the summation of all longitudinal crack lengths initiating from the 48 tendon entry locations is less than 6 inches (150 mm) with no single crack longer than 4 inches (100 mm), then the proposed tie design and selected materials have a demonstrated factor of safety to resist early-age bursting forces without cracking.

Modified ties with reduced tendon edge distance: After 14 days, if the summation of all longitudinal crack lengths initiating from all tendon entry locations is less than 6 inches (150 mm) with no single crack longer than 4 inches (100 mm), then the proposed tie design and selected materials have a demonstrated factor of safety to resist early-age bursting forces without cracking.

4.2.4.2 Design and Fabrication of Test Prisms

This section details the design and fabrication of test prisms for the SRT.

a. Determination of Prism Parameters:

This section provides a step-by-step procedure to calculate the SRT prism parameters based on a given tie design.

(1) Determine the total number (*n*) of prestressing tendons in the actual tie.

(2) Determine the prestress jacking force (*P*) per tendon

(3) Determine the smallest cross-sectional area (*A*) located anywhere along the length of the tie

(4) Determine the smallest possible edge distance (*D*) for an individual tendon within 12 inches (275 mm) of the tie end. This distance is measured from the center axis of the tendon to the nearest concrete surface minus allowable placement tolerances.

(5) Calculate the tendon reduced distance (*RD*) to be used for the prisms where *RD* = 0.75 x *D*. This number may be rounded down to the nearest 1/16" for convenience.

(6) Calculate the dimensions of the square cross-section (*S x S*), where $S = \sqrt{4A/n}$ rounded to the nearest 1/8 inch

b. Prism Fabrication:

Cast six pretensioned concrete prisms having a square cross-section with dimensions *S x S* and four tendons with a tendon reduced distance *RD*. The dimensional tolerances for prism fabrication are ±1/8" (± 3.2 mm) for cross-section dimension *S* and +1/32", -1/8" (+0.8 mm, -3.2 mm) for edge distance *RD*. The prisms should have a minimum length of 60" (1.52 m). When fabricating the prisms, use the same prestressing tendons, jacking force per tendon (*P*), concrete mixture, placement, vibration, curing and de-tensioning procedures used for the production concrete ties. Temperature-match cure the prisms and de-tension at the minimum allowable de-tensioning strength for the ties ±200 psi (±1.4 MPa) as determined by the average of two or more compression strength cylinders. The prisms may be fabricated directly by the tie producer or by an experienced lab capable of meeting the above criteria.

NOTE: If a shorter prestressing bed is used to fabricate the prisms than is used to manufacture the actual ties, excessive chuck seating losses could significantly reduce tendon tension and thereby skew the test in a more favorable way. In this case, one or more in-line load cells can be used to verify proper tendon tension is achieved after seating of the chucks.

c. Additional Sampling of Prestressing Tendons:

At the time of prism fabrication, cut twelve 36-inch (910-mm) samples of the prestressing tendons and save these in a clean, sealed container. These tendons can then be benchmarked using appropriate ASTM bond tests (ASTM A1096 for wires, ASTM A1081 for strands). Benchmarking tendon bond according to the current ASTM standards will enable prestressing tendons with similar-bonding characteristics to be specified in future purchase orders.

d. Prism Inspection and Storage:

Within eight hours of de-tensioning, inspect all 12 prism ends (both ends of six prisms) for cracking at each location where the prestressing tendon enters the concrete (48 locations total). Inspection should be done using a bright light, alcohol spray, and 5x magnification. Note any visible cracks by drawing a line adjacent to the crack using a fine-point permanent marker. The line should be drawn along the entire length of any visible cracks. Measure and record the total length of each crack that runs parallel along the tendon. Note: cracks that appear on the ends of the prism but do not propagate to the exterior surface of the prism and along the tendon shall have a length of zero. All initial cracks should additionally be documented by photographs.

The prisms should be stored in a dry condition (not moist or wet cured) and kept from freezing. Storing the prisms in a dry condition will maximize drying shrinkage and enhance the conditions for cracking.

After 14 days, the ties should be re-inspected using a similar procedure as above. All new cracks and/or any crack growth should be noted with a different-colored fine-point permanent marker and the total longitudinal length of each crack should be measured and recorded. All cracks should again be documented by photographs.

Example 3: Calculation of SRT Prism Parameters and Adjustment to Whole-Tie Cross Sections

The generic prestressed concrete tie cross-section in Figure 30-4-3, located near the end of a tie, has fifteen 0.25-inch (6.35-mm) diameter prestressing tendons that are initially tensioned to 9,200 pounds (40.92 kN) each. The smallest nominal edge distance of any tendon within 12 inches (270 mm) of the tie end is determined to be 1.40 in. (35.6 mm). The tendon placement has tolerances of ±1/8 in. (±3.2 mm). The smallest cross-sectional area of the tie is known to be 81.5 in^2 (52,580 mm^2).

Determine the parameters of the SRT prisms.

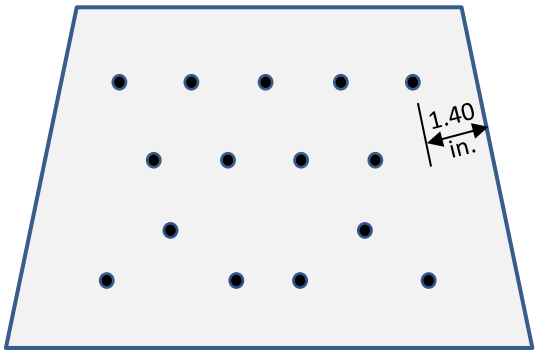

Figure 30-4-3. Generic Tie Cross-Section

Note, in this example the average initial compressive stress in the tie (neglecting losses) is calculated as…

$$\frac{(15\ wires)\left(\frac{9200\ lb}{wire}\right)}{81.5\ in^2} = 1693\ psi\ (11.67\ MPa)$$

The minimum permissible edge distance, *D*, is 1.40 in (nominal) – 0.125 in. (tolerance) = 1.275 in. (32.4 mm). The reduced distance, *RD*, is then determined as 0.75 x 1.275 in. = 0.956 in. (24.3 mm). This may be rounded down to 15/16 in. (23.8 mm) for convenience or kept at 0.956 in. (24.3 mm).

The side dimensions of the square prism are then calculated as $\sqrt{(4)(81.5\ \text{in}^2)/(15)}$ = 4.66 in (118 mm). Rounding to the nearest 1/8 in (3.18 mm) = 4 5/8 in (117.5 mm). Therefore, use the prism cross-section shown in Figure 30-4-4.

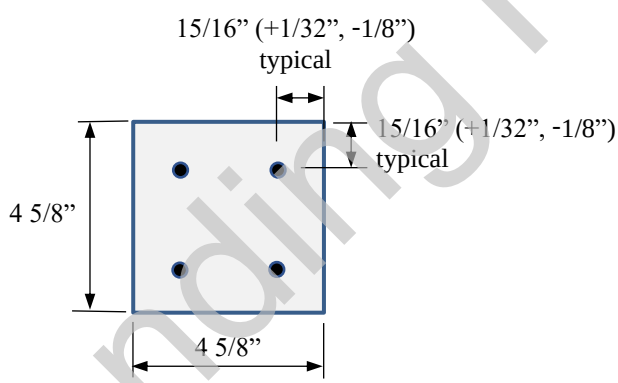

Figure 30-4-4. SRT Prism Cross-Section (Corresponding to Tie in Figure 30-4-3)

The average initial compressive stress in the SRT prism (neglecting losses) is calculated as…

$$\frac{(4\ wires)\left(\frac{9200\ lb}{wire}\right)}{(4.625\ in)^2} = 1720\ psi\ (1187\ MPa)$$

Note: the prism has approximately the same compressive stress as the tie cross-section. The slight difference is due to rounding of dimensions.

Figure 30-4-4 depicts a prism corresponding to the specific tie cross-section shown in Figure 30-4-3. SRT test requirements can also be satisfied by testing six, 4-wire prisms. Such prisms would have the same or smaller square cross-section along with the same or smaller tendon reduced distance *RD* as the concrete tie. In this way, a tie producer could meet SRT requirements for several tie designs that utilize the same concrete mixture and release strength by testing the most-severe case.

Example 3 (continued)

In lieu of fabricating prisms, it is permissible to complete the SRT test using six whole ties with a reduced tendon edge distance. These modified ties should utilize the same prestressing tendon pattern but with reduced tendon distances (*RD*) per Example 3, above. The reduced edge distance should be applied at each end of the ties for a length of 24 inches (610 mm), minimum. Inspection and storage of the modified ties should be the same as for the prisms.

In the case of the Generic Tie cross-section presented in Figure 30-4-3, the smallest nominal tendon edge distance was 1.40 in. and the reduced edge distance was calculated as 0.956 in. (rounded down to 15/16”). SRT requirements can be met by casting and monitoring the performance of modified-tie cross-sections with tendon edge distances reduced equally so that the most severe case will result in a reduced edge distance that is equal to 75% of the minimum nominal edge distance. In this case, the minimum amount of reduction from each side and top surface would be 0.444 inches (= 1.40 inches – 0.956 inches). The test requirements are met when six modified ties are fabricated and evaluated per the requirements established for the prisms, above. When casting the modified ties, compression strength cylinders should be temperature-match cured and the modified ties de-tensioned at the minimum allowable de-tensioning strength for the ties +400, -0 psi (+2.8, -0 MPa) as determined by the average of two or more compression strength cylinders. It is permissible to cast the six modified ties one at a time, on six different cast dates.

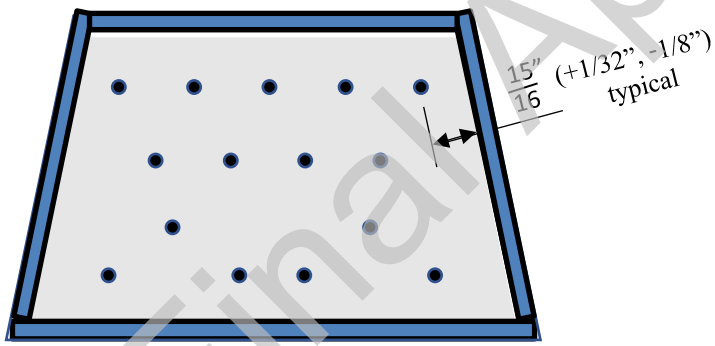

Figure 30-4-4. SRT Modified Whole-Tie Cross-Section (Corresponding to Figure 30-4-3)
Note, all side and top have been reduced by a minimum of 0.444 inches in this case

4.2.4.3 Suggestions for Corrective Action in the Event of SRT Failure:

If the summation of longitudinal crack lengths is more than 6 inches, this is an indication that the tie design may have an increased risk of end-splitting due to insufficient cover for the prestressing tendons and concrete mixture selected. Careful measurements of tendon edge distances should be made to determine if the prisms were fabricated correctly, and all test documentation should be reviewed to ensure that the proper mixture and release strength were obtained. If the test was conducted correctly then appropriate adjustments should be made to the design parameters and the SRT should be repeated to obtain a more resilient design.

The most direct way to provide increased splitting resistance is to increase the concrete cover for exterior prestressing tendons in the design. Other ways to reduce splitting propensity include using prestressing tendons with different indent characteristics and/or lower inherent bond (i.e. having lower ASTM A1081 or A1096 values), using larger and/or more angular coarse aggregates, and increasing concrete strength at de-tensioning.

Based on finite-element analyses conducted at Western New England University and the Volpe National Transportation Systems Center[1], a minimum prestressing tendon edge distance (*D*) of four diameters and a minimum center-to-center tendon spacing of seven diameters is recommended to reduce the risk of end-splitting[1].

4.2.4.4 Flexural Load Tests to Failure

In addition to end-splitting that can occur during the first few weeks after de-tensioning, end-splitting of ties can also result from extreme overloads. This occurs when tendon end-slippage (bond slip) occurs due to additional tensile demands produced by flexural and/or shear cracking. End-splitting during load tests indicates that the concrete mixture and prestressing tendon system is incapable of remaining intact during extreme overloads. Since concrete end-splitting is an undesirable failure mode, plants are encouraged to frequently bend test full-strength concrete ties to failure to ensure there will not be end-splitting.

Additional Chapter 30 Reference

1. Shin M, Yu H. "Numerical Evaluation of Splitting Performance of Prestressed Concrete Prisms with Larger Diameter Prestressing Wires" Proceedings of the 2019 Joint Rail Conference, JRC2019-1315, April 9-12 2019, Snowbird, Utah, USA.