Recommended Vital Design Guidelines for Dead Section Protection

New 2021 (8 Pages)

A. Purpose

This Manual Part recommends the vital circuit design guidelines for signal control and route locking where track circuits are discontinuous or unreliable due to rail and ballast conditions. These techniques may also be applied in territory where poorly shunting vehicles regularly operate.

B. General

1. The vital circuit design guidelines provided in this Manual Part shall also apply to equivalent vital software applications.

2. The vital circuit design guidelines provided in this Manual Part represent several types of circuits which provide the equivalent of continuous track circuit coverage through non-detecting dead sections of track. Some aspects of design may vary depending on the practices of individual railroads.

3. Sequential track occupancy detection logic (aka 'trap circuit') is provided to protect non-detecting dead sections within or between track circuits. Short dead sections within track circuited territory are sometimes unavoidable due to features of track construction. For example, where tracks intersect at diamond crossings of an angle greater than about 30 degrees, insulated joints necessary to electrically isolate the parallel running rails cannot be placed inside the diamonds.

C. Design

1. Where the dead section within or between track circuits is longer than 35 feet (or the shortest outer wheel base of any locomotive or self-propelled vehicle, whichever is shorter), a trap circuit is provided. The trap circuit is intended to prevent clearing of signals or changing of a route while a short vehicle is occupying the dead section.

2. A 'trap' is formed by two or more track circuits bordering a dead section. Once the trap track circuit has become occupied, signals governing movement over the dead section cannot be cleared (and route locking cannot be released) until a track circuit on the opposite side of the dead section is occupied and vacated in proper sequence.

3. Figure 1649-1 shows three basic forms of trap logic using track circuits. These examples illustrate the general form and function trap logic.

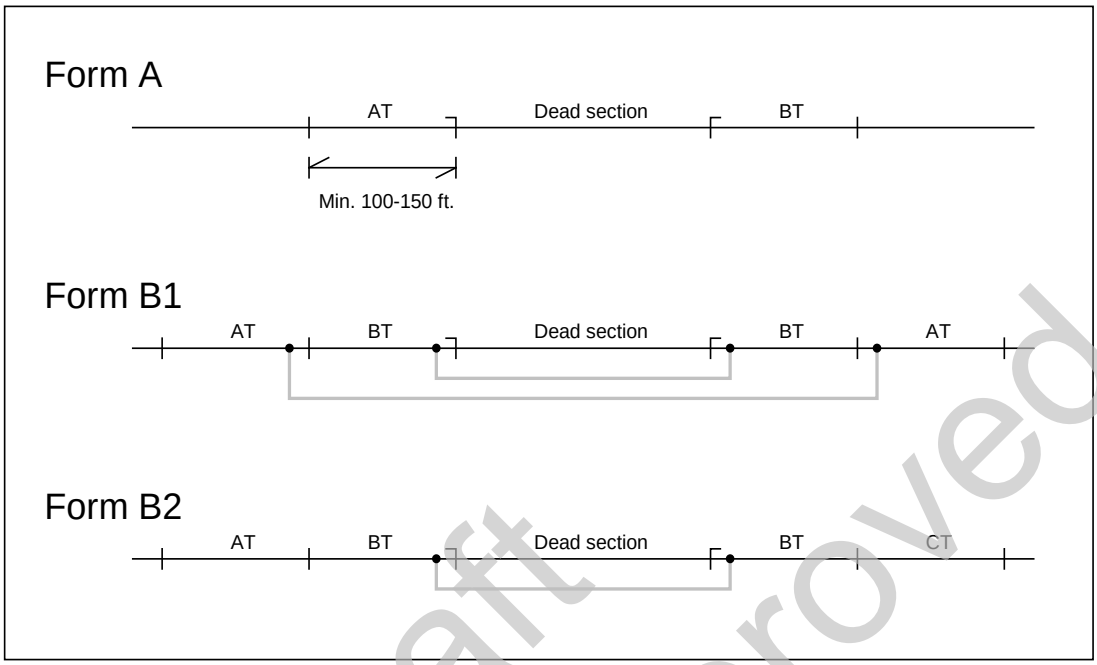

Figure 1649-1: Arrangement of Track Circuits Controlling Trap Circuit

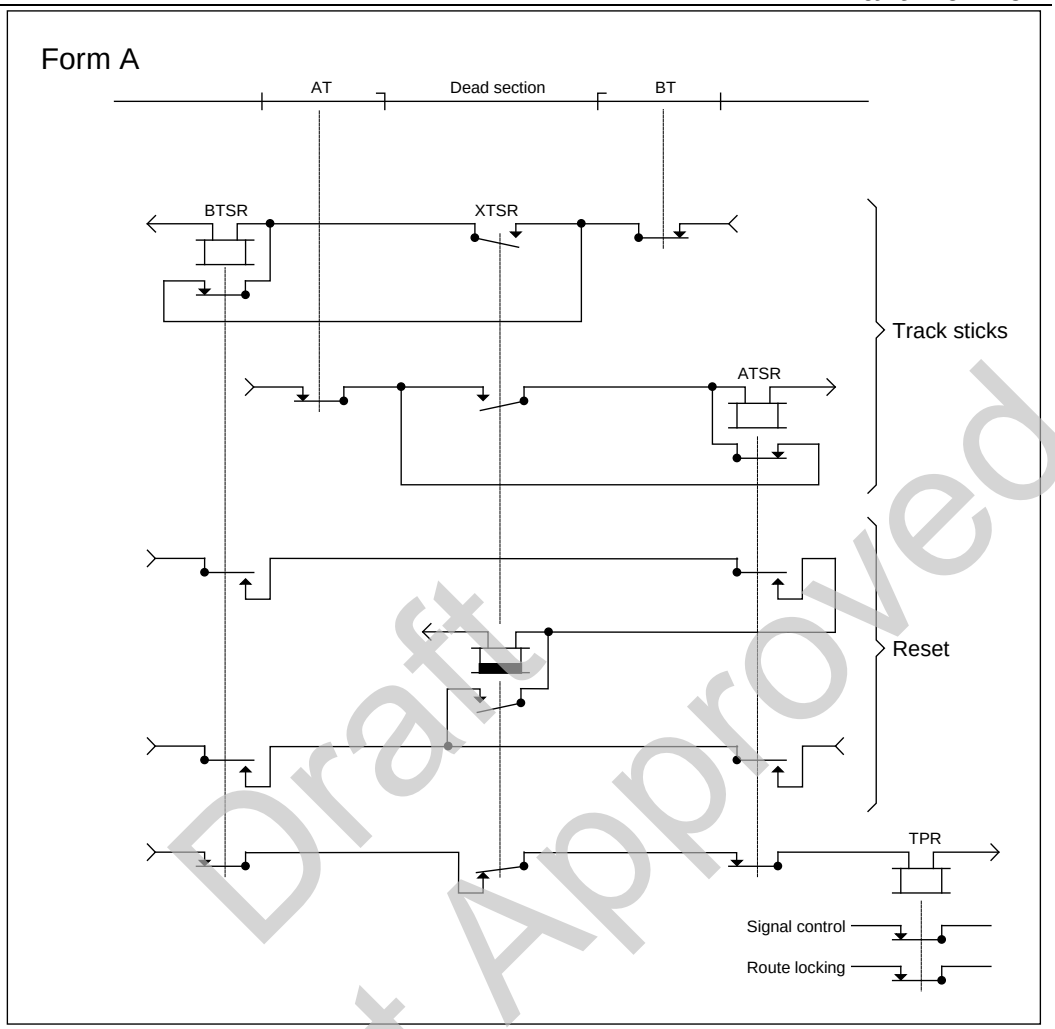

Figure 1649-2: Form A Trap Logic

a. Figure 1649-2 shows the Form A trap. Signal control and route locking circuits for all routes over the crossing are controlled over a front contact of TPR.

(1) Occupancy of track circuit AT or BT drops the associated TSR ('trap') relay.

(2) XTSR picks after both AT and BT are occupied.

(3) Trap relays ATSR and BTSR repick after track circuits AT and BT have been sequentially occupied, then vacated by a train completing its movement.

(4) No provision is made for recovery of normal operation if a train occupies AT, then reverses direction and vacates AT (also applicable to reversing moves on BT).

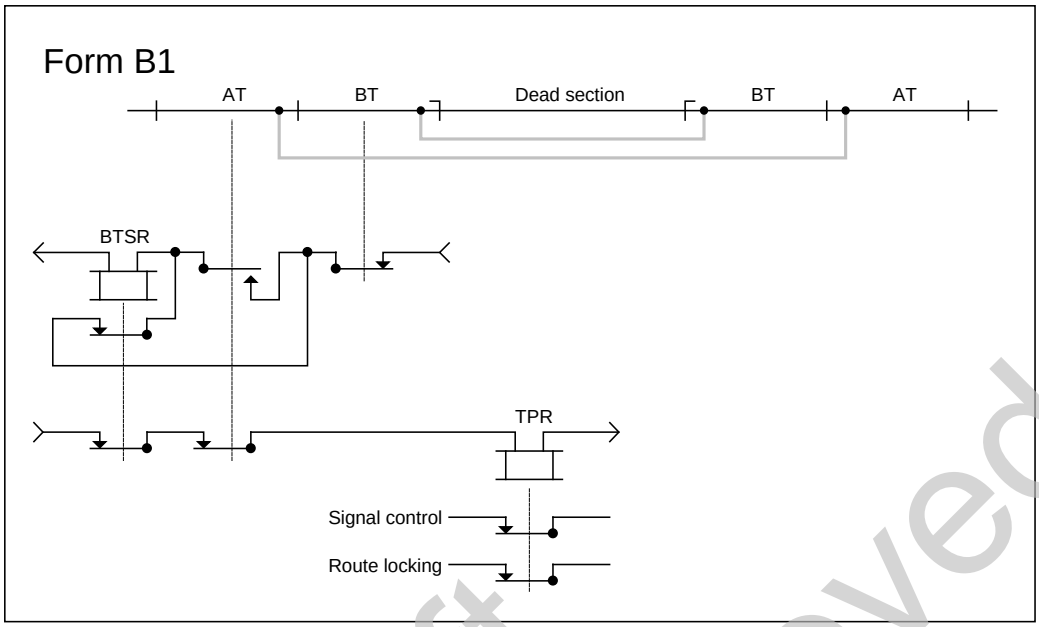

Figure 1649-2a: Form B1 Trap Logic

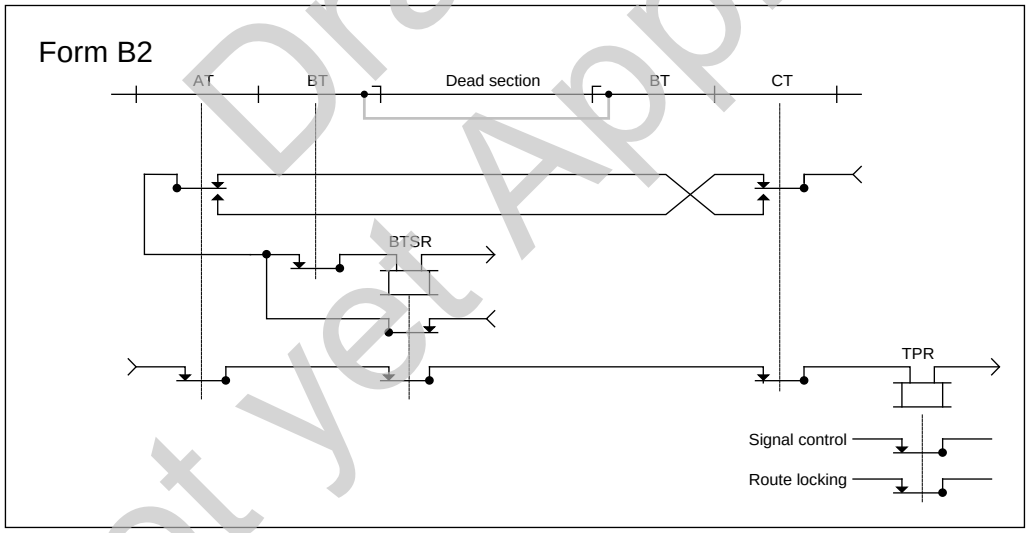

Figure 1649-2b: Form B2 Trap Logic

b. Figures 1649-2a and 2b show an alternate arrangement of track circuits and trap logic. Signal control and route locking circuits for all routes over the crossing are controlled over a front contact of TPR.

(1) Occupancy of track circuit BT drops the BTSR ('trap') relay.

(2) Unlike the Form A arrangement shown in Figure 1649-2, a train reversing movement over AT or within the dead section resets the trap and restores normal operation.

(3) As with the Form A scheme, the minimum live length of each segment of AT and BT shall be greater than the maximum inner wheel base of the longest car (minimum 62 feet, and preferably at least 100-150 feet).

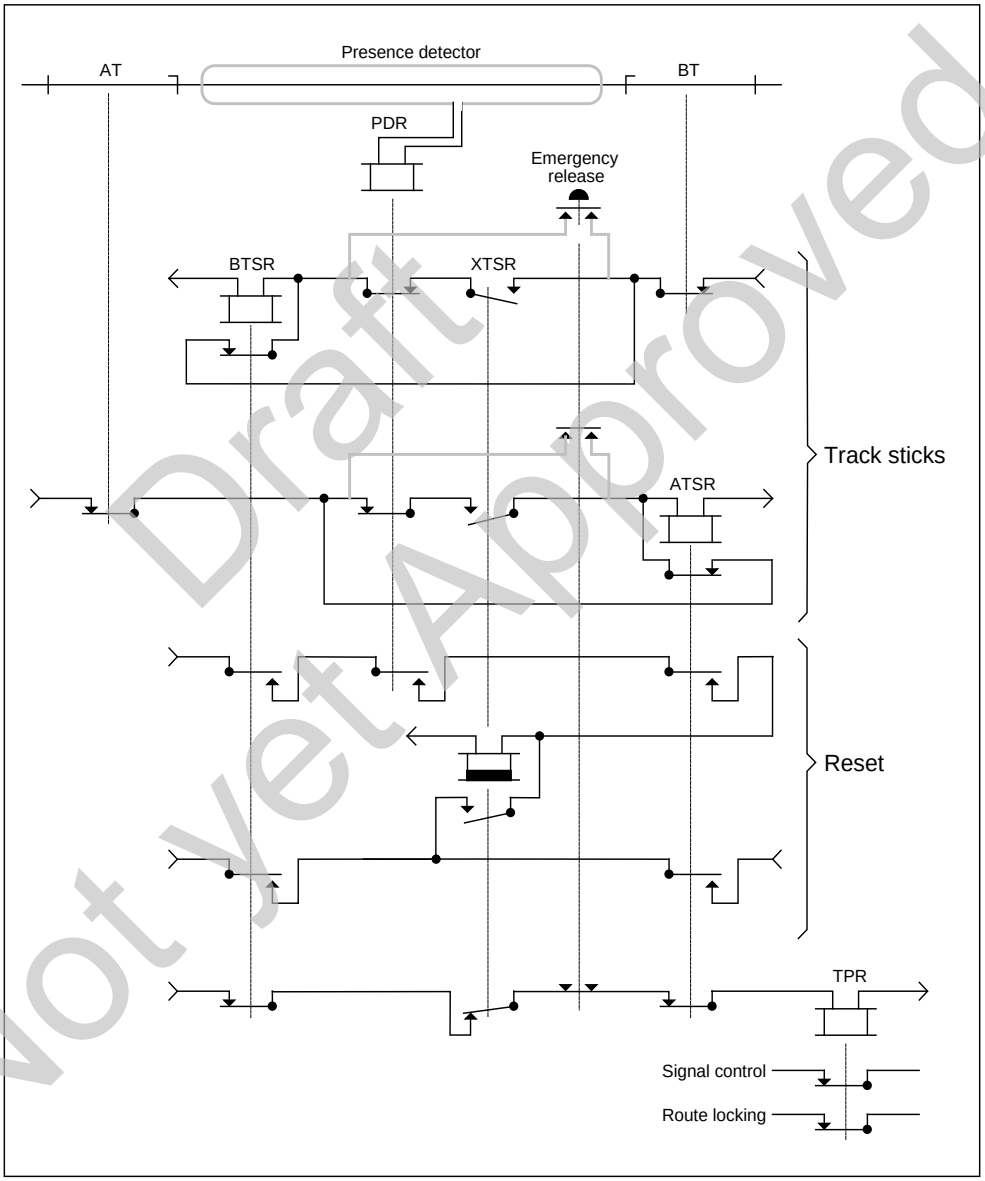

Figure 1649-3: Form A Trap with Addition of Emergency Release and Presence Detector Loop

c. Figure 1649-3 shows a presence detector device which provides an alternate means of train detection throughout the dead section. The presence detector serves to detect an uncoupled vehicle left standing within the dead section and to prevent premature release of the trap caused by intermittent shunting of track circuits, which is cycle-checked as part of the circuit logic.

(1) XTSR picks only when AT, BT, and PD are down.

(2) Operation of the presence detector is cycle-checked by contacts PDR in XTSR, ATSR, and BTSR circuits.

d. Insulated Joints and Bonding

Insulated joint layout, rail bonding, and polarity/frequency arrangements for track circuits associated with traps shall conform with the following requirements. Refer to Manual Part 2.1.20A Recommended Insulated Joint Location for Automatic Signals and Interlocking and Manual Part 2.1.20E Recommended Insulated Joint Location for Railroad Crossings at Grade.

(1) For insulated joints at home signals, the effective joint shall be no further than 13 feet (3.96 m) in advance of the mast centerline.

(2) Insulated joint stagger should not exceed the shortest truck wheelbase (typically 4' 6").

(3) Long cars shall not span over short track circuits (or a segment of a track circuit). The minimum live length of AT and BT shall be greater than the maximum inner wheel base of the longest car (currently 62 feet (18.9 m) for 96-foot cars) and preferably no less than 100 feet to- 150 feet (30.48 m to 45 .72 m). Where insulated joints are in close proximity to a dead section, the non-shunting zone between staggered insulated joints must be considered.

(4) Track circuit shunting shall not rely upon bonding arrangements which pass shunt current through journal bearings, trucks, car frames, or couplers.

(5) Track circuits, insulated joint layout, and bonding arrangements shall be designed so that a shorted insulated joint shall not cause:

(a) Track relay or receiver to falsely pickup or remain energized while the track circuit(s) is shunted with a zero-ohm shunt.

(b) Loss of broken rail detection on adjoining or adjacent tracks.

(c) Cab signal leakage into adjoining or adjacent tracks.

(6) To prevent improper manipulation or inadvertent release of a trap, track circuits within traps shall not be shunted or broken by switch circuit controllers.

(7) General guidance in track circuit design:

(a) Where propulsion or foreign current may be present, track wires [track circuit current] should not be switched through silver-impregnated carbon relay contacts or switch circuit controller contacts.

e. Emergency Release

An optional manually operated emergency release pushbutton may be provided to override a trap condition caused by irregular train movements, intermittent track circuit or train detector failure, or maintenance activities, etc. Emergency release devices for trap circuits shall satisfy the following requirements:

(1) Signal Control:

(a) Emergency release devices shall remain disabled until all signals governing movement over a trap are at stop and time locking has expired.

(b) Alternately, actuation of an emergency release device shall cause all signals governing movement over a trap to display their most restrictive aspect.

(c) Actuation of an emergency release shall not bypass time locking or loss-of-shunt pick-up delay on track circuits.

(d) Emergency release devices shall be checked in their normal/deactivated position before allowing signals to clear or route locking to release.

(2) Location and Marking of Devices:

(a) Emergency release devices shall be located to provide an unobstructed view of the entire dead section.

(b) Where applicable, emergency release devices shall be located so that their function can be clearly associated with the dead section that they control.

(c) Emergency release devices shall have clear, uniform, unambiguous markings and concise instructions governing their use.

(3) Operation:

(a) Emergency release devices shall be locked, sealed, monitored, and/or otherwise protected against inadvertent or malicious use.

(b) No more than one emergency release device (or logic function) per trap. Where separately housed/locked emergency release devices are provided for use by train crews of differing railroads, all devices shall be co-located.

(c) Emergency release devices shall have an indicator lamp (or equivalent display device) that provides a clear, unambiguous indication of trap status.

(d) Independent emergency release devices shall be provided for each individual trap circuit/function. Emergency release devices shall not be combined to simultaneously reset multiple independent traps.

(e) Trap circuit emergency release devices shall be arranged to reset only the trap logic function. Trap emergency releases shall not bypass signal control or route locking functions.